Bell's Inequalities: From Foundations to Modern Tests

November 21, 2025

Entanglement has long been seen as one of the most mysterious features of quantum mechanics. For two particles in an entangled state, neither possesses individual definite properties, however, their measurement outcomes are strongly correlated and dependent, no matter how far apart they are[1].

This peculiar connection between particles troubled Einstein, Podolsky, and Rosen in 1935, who argued that such behaviour implied that quantum mechanics could not fully describe nature[2]. Their reasoning relied on two assumptions intuitive to classical physics: realism (measurement results reflect pre-existing properties) and locality (no influence propagates faster than light), together forming local realism. In this framework, measurement outcomes must be predetermined by "hidden" parameters established before the particles separate[3].

For almost three decades, the status of these assumptions remained a matter of interpretation until John Bell demonstrated in 1964 that their consequences could be tested experimentally.

Bell's inequalities

Bell (Fig. 1) derived constraints, now known as Bell inequalities, that must be obeyed by any theory retaining both locality and realism[4].

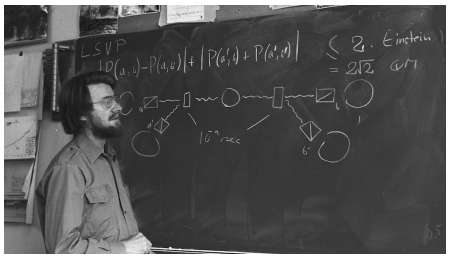

Figure 1: John Bell in 1982, exploring experimental tests of his inequalities[5].

To formalise realism, Bell assumes that when a pair of entangled particles is emitted, it carries some pre-existing, "hidden" information, denoted by λ. The symbol λ can represent a single parameter, a set of variables, or even functions; the point is that it encodes a more complete description of the pair than the quantum state ψ alone by predetermining a possible later measurement. A theory that considers such variables is called a local hidden-variable theory (LHVT)[4].

If A and B, usually called Alice and Bob, are stations where measurements are performed, then Alice's measurement result of a setting a is a deterministic function $A(a, \lambda)$, and similarly for Bob, $B(b, \lambda)$.

For an ensemble of many such pairs, the source emits systems with different hidden variables λ according to some normalised probability distribution $p(\lambda)$, which is assumed to be independent of the later choices of settings a and b. The predictions of any local-realistic model are then obtained by averaging over λ.

$$E(a) = \langle A(a) \rangle = \int A(a, \lambda)\, p(\lambda)\, d\lambda\,. \tag{1}$$

In probability-theory notation, the correlation for a given pair of settings is the expectation value of the product of the two outcomes:

$$\begin{aligned} E(a, b) &= \langle A(a) B(b) \rangle \\ &= \int A(a, \lambda)\, B(b, \lambda)\, p(\lambda)\, d\lambda\,. \end{aligned} \tag{2}$$

Here $E(a, b)$ is simply the average value of the product of the two outcomes (for example, two spin components measured along directions a and b)[4].

Bell's key result is that, for any theory that obeys these assumptions (locality, realism, and a setting-independent distribution $p(\lambda)$), the correlations $E(a, b)$ cannot be arbitrary: they must satisfy a Bell inequality. In what follows, we focus on the version formulated by Clauser, Horne, Shimony, and Holt (CHSH) in 1969[6].

Testable inequalities

CHSH extend Bell's constraints to physically realisable systems, thus making Bell's constraints ver-

ifiable. They consider a simple scenario, sketched in Fig. 2.

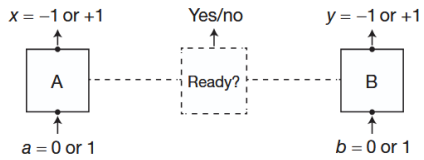

Figure 2: Simple schematic of the scenario used in CHSH's inequalities[7].

Consider a source that emits two entangled particles sent to two distant locations, Alice and Bob. Each of them independently chooses one of two possible measurement settings. We denote these choices by $a \in \{0, 1\}$ for station A and $b \in \{0, 1\}$ for station B.

Each measurement yields a binary outcome[6,7]:

$$x = \pm 1 \quad \text{and} \quad y = \pm 1.$$

The values $a, b \in \{0, 1\}$ label which observable is measured (for instance, spin along two different directions), while $x, y \in \{\pm 1\}$ label the corresponding measurement outcomes. Thus, there are four possible combinations of measurement choices:

$$(a, b) = (0, 0),\ (0, 1),\ (1, 0),\ (1, 1).$$

In each trial, the settings are chosen at random and the pair of outputs (x, y) is recorded. For fixed settings (a, b), the correlation predicted by a local hidden-variable model is given by Eq. (2), with $A(a, \lambda)$ and $B(b, \lambda)$ representing the predetermined outcomes. CHSH then consider a specific linear combination of the four correlations:

$$S = E(0, 0) + E(0, 1) + E(1, 0) - E(1, 1). \quad (3)$$

Simple algebra with the four products $A(a, \lambda)B(b, \lambda)$ then shows that, for every λ,

$$-2 \leq S(\lambda) \leq 2,$$

and averaging over λ cannot increase this bound. Thus any LHVT must satisfy

$$|S| \leq 2. \quad (4)$$

However, in an ideal quantum configuration, the CHSH parameter reaches a theoretical maximum of

$$S_{\text{QM}} = 2\sqrt{2} \approx 2.83,$$

clearly exceeding the local-realist bound[7].

Both Bell's and CHSH's work were solely theoretical. Whether nature follows quantum predictions remained unproved until dedicated "Bell tests" were performed.

Atomic Cascades

In their original paper[6], CHSH proposed a experimental realisation of their inequality, by adapting an earlier setup of Kocher and Commins. Their idea is to generate pairs of polarisation-entangled photons from an atomic cascade, before measuring their polarisation correlations[7].

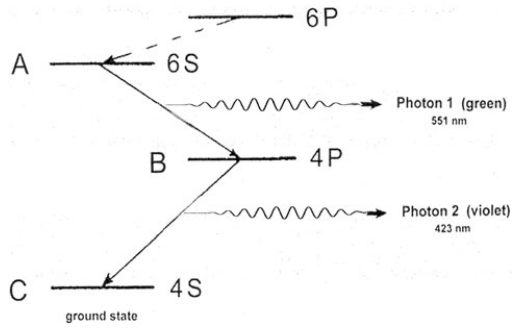

Figure 3: Atomic cascade of the calcium atom. Most atoms decay back to the ground state, except a small fraction decay via two intermediate level[9].

A beam of intense ultraviolet light from an H_2 arc lamp excites calcium atoms into the ${}^61P_1$ state. The transition in spectroscopic notation (subscript $\{0, 1\}$ describes the total angular momentum J and $\{P, S\}$ describes the orbital angular momentum L) is given by:

$${}^61P_1 \to {}^61S_0 \to {}^41P_1 \to {}^41S_0. \quad (5)$$

Each intermediate transition emits a photon with well-defined wavelengths:

$$\lambda_1 = 551.3\,\text{nm}, \qquad \lambda_2 = 422.7\,\text{nm}.$$

Both wavelengths are in the visible range, thus detectable using standard photomultipliers, which convert light into an electrical signal, and linear polarisers, which filter specific wavelengths[8]. Narrow bandpass filters ensure that each photon is directed to the correct side.

Moreover, the initial and final atomic levels in the chosen cascade both have total angular momentum $J = 0$, while the intermediate level has $J = 1$. Conservation of angular momentum then forces the two emitted photons to share one unit of total angular momentum, such that the pair is entangled with respect to polarisation.

To test Bell's inequality experimentally, one must measure how many times both photons are detected simultaneously for a given pair of polariser settings. This is done by recording coincidence counts, $N_c(a, b)$, defined as the number of

joint detections occurring within a short coincidence window (typically a few nanoseconds). The coincidence rate is then

$$R_c(a,b) = \frac{N_c(a,b)}{T}, \tag{6}$$

where T is the total acquisition time.

These coincidence measurements replace the theoretical ± 1 outputs used in the CHSH derivation. Hence, using the physical detection channels (e.g., transmitted vs. reflected through polarisers), one reconstructs the expectation values $E(a,b)$ in Eq. (3), and finally computes the Bell parameter S by distinguishing coincidences between correlated and anticorrelated outcomes.

This procedure made clear that a Bell test was experimentally feasible, although the first conclusive demonstration was yet to be achieved.

Freedman and Clauser's experiment

Freedman and Clauser first performed a successful Bell test in 1972 using the above-described experiment. The setup, see Figure 5 (top), is very similar to the one used by Kocher and Commins[8], except from a key difference: Freedman and Clauser employed rotatable polarisers, allowing them to be set at several angles[10]. In contrast, Kocher and Commins only positioned the polarisers at fixed angles of 0° and 90°, such that the collected data was insufficient to test the CHSH inequalities[6].

Freedman and Clauser measured the coincidence rate $R(\phi)$ between detections of the two photons, where ϕ is the difference between the angles of the polarisers. The coincidence-rate ratio $R(\phi)/R_0$, shown in Figure 4, decreases as ϕ increases. This is consistent with quantum predictions that polarisation correlations diminish as the analysers become increasingly misaligned.

The Bell-type bound they tested differs from Eq. 4, as it includes the coincidence rates when there are no polarisers at all (the reference R_0), following a form derived in the CHSH paper[6].

Here,

$$-1 < S < 0 \tag{7}$$

Using data at $\phi = 22.5°$ and $\phi = 67.5°$ (see Figure 4), gives

$$S = 0.05 \pm 0.008,$$

clearly violating the local-realist bound [10].

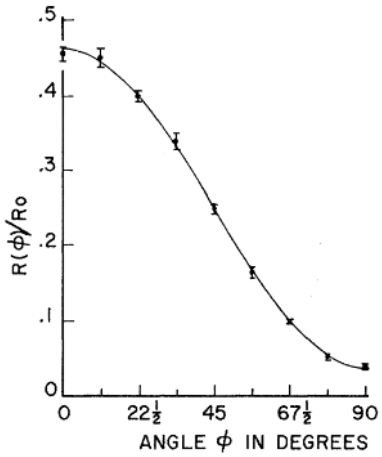

Figure 4: Coincidence-rate ratio as a function of ϕ. The solid line is the prediction by quantum mechanics and the dots represent the experimental data. R_0 denotes the coincidence rate without polarisersm[10].

Loopholes

Is this the end of the story? Not really. A local-realist theory could still reproduce the data as presented in Freedman's experiment due to so-called *loopholes*, flaws in the experiment that leave room for a classical explanation.

Indeed, even though Freedman and Clauser successfully shattered Bell's inequalities, their detection efficiencies of 13% and 28% respectively were too low, firstly. As derived by Pearle, detector efficiency is bounded below by 82.83% to ensure loophole-free data[11,12]. It implies that the detectors only detected a small subset of pairs of particles, leaving a majority of undetected pairs that potentially obeys LHVT.

Secondly, Freedman's experiment was also subject to the *locality loophole*. This occurs if the detectors are separated by a *timelike* interval, allowing particles to communicate before the measurement, or if the measurement settings are defined sufficiently ahead of time, which was the case in this experiment. If the measurement parameters are defined prior to emission of the entangled pair, then they could just be correlated by a hidden variable defined by these parameters[13].

Aspect's Experiment

In short, Aspect *et al.* closed the locality loophole[14]. Once again, a calcium atomic-cascade source produced polarisation-entangled photons. The experimental setup was similar to Freedman's,

with one key difference: Aspect introduced fast time-varying polarisers, making the setup dynamically switch between measurement settings during the flight of the photons.

On Figure 5, C1 and C2 are switches that redirect the photons between polarisers of different orientations, a, a' and b, b' respectively.

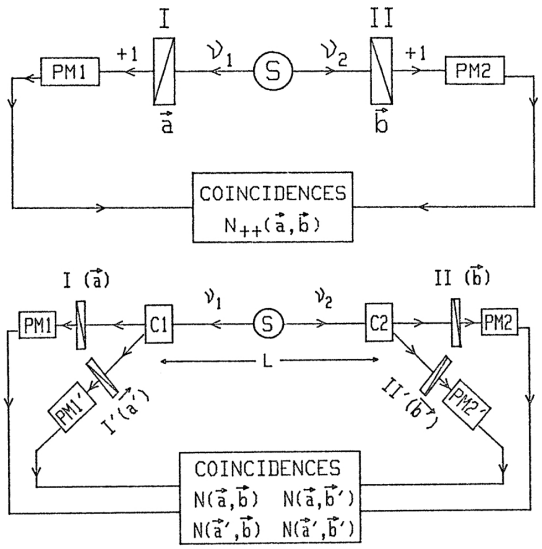

Figure 5: Top: Schema of Freedman's and Clauser's setup, where entangled photons go through polarisers I and II, and photomultiplier tubes. Bottom: Schema of Aspect's setup[15].

Switches change between polarisers every 10 ns, which is less compared to the transit time of 20 ns for the photons to travel from the source to the detectors[11]. Clearly no signal, subject to locality, can travel between the particles in the time that the switch operates. This closes the locality loophole.

Instead of two polarisers, one can understand this as having respectively one polariser that changes quickly between orientations, thus having a similar scenario than in Freedman's and Clauser's experiment. Hence, coincidence rates also obey Eq. (7) as for Freedman's experiment. Here, Aspect shows that $S = 0.101 \pm 0.020$ [14].

A loophole-free test

Aspect's experiment marked a turning point, but it still left the detection loophole open. More than 30 years later, Hensen et al. finally closed both major loopholes, achieving the first fully loophole-free Bell test in 2015[7].

Instead of the traditional photon-entanglement, they entangled electron spins hosted in nitrogen-vacancy (NV) centres in diamond[13]. An NV centre is a point in the diamond where a nitrogen atom replaces a carbon atom, hosting an electronic spin that can be manipulated with microwave pulses[16], meaning that the spin of the electron can be rotated by such radiation.

Let Alice and Bob each have one NV centre in a diamond, cooled to $4K$. The spin was prepared with light, controlled by microwave pulses according to the random setting, and then measured. Linking this with the binary output previously discussed: if the spin fluoresced, the outcome was $+1$; if not, -1[7].

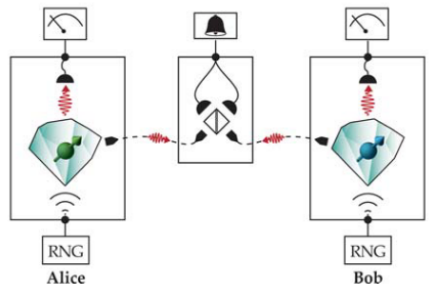

Figure 6: Schema of Hensen et al.'s experiment[7].

When an NV center emits a photon, the spin state of the electron becomes linked to when the photon is emitted, either early or late. This timing, the time-bin, works like a qubit for the photon. As a result, each spin is entangled with the time-bin state of its photon[7].

These two photons are sent from Alice and Bob to the lab C, see Fig. 6, where they interfere at a beam splitter, that transmits or reflects the photons. If detectors at C register exactly one early and one late photon in different output ports, that measurement projects the photons into an entangled state[7].

Because each photon was previously entangled with its local spin, this successful interference "swaps" the entanglement onto the two distant spins from Alice and Bob. Detecting that specific pattern sends a confirmation signal, meaning that the experiment knows in real time which trials successfully generated spin–spin entanglement. Only these successful trials are used in the Bell test. This method greatly enhances the detector efficiency to a fidelity of 96 % and 97 % respectively[7].

Hensen et al. measured the correlations of spin-entanglement in the NV centres. The basis choice for the measurement changes every 160 ns, while the 1,280 m separation between the laboratories leaves 4,270 ns for a light signal to travel, thus

comfortably closing the locality loophole. By finding $S = 2.42$, they violate the local realist bound from Eq. (4)[7].

By delivering the first fully loophole-free Bell test, Hensen et al.'s experiment marked the culmination of decades of development following Freedman (1972), Aspect (1982), Rowe (2001) but also many others.

Discussion

With the experimental question now settled in favour of quantum mechanics, attention naturally shifts back to the underlying assumptions[17]. Philosophically, what does the violation of Bell's inequality actually tell us? The previously discussed experimental conclusions only show that quantum mechanics does not obey Bell's inequalities, thus it cannot be explained by local hidden variables. This does not give information about what caused local realism to fail here: locality or realism? A satisfactory explanation is still needed as different positions face inconveniences. The nihilist position of rejecting both locality and realism shall not be considered here.

Firstly, rejecting completely realism from a localist perspective is hard, as definite, realistic quantities are needed to describe space time. In particular, Bell tests rely on the reality of the position of the photon detector and non-relativity of the time it takes to detect a particle. However, adopting a realistic position is challenging as relativistic causality needs to be preserved despite abandoning locality[17].

The Copenhagen interpretation offers an interesting compromise: it rejects realism for quantum systems but keeps it for spacetime, where classical notions of position and time measurement are still assumed. This remains the most commonly adopted position, though a fully satisfying solution is still open.

Importantly, however, Bell's theorem and the experimental tests are not merely a philosophical discussion. Important applications include cryptography, quantum networks or the foundations of quantum computing[18].

In quantum cryptography, entanglement helps to carry information in a way that is not predetermined, as, upon measurement, entangled systems give outcomes that are individually random yet jointly correlated. The security of entanglement-based Quantum Key Distribution (QKD) uses this non-classical correlation: an eavesdropper cannot gain information about the key without disturbing the entangled state, because any intervention (or measurement) necessarily leaves a trace[18].

In conclusion, Bell's inequalities being shattered confirms that the correlations predicted by quantum mechanics cannot be explained by local hidden variables. Beyond its intellectual impact, this perspective supports quantum technologies in its' development. The challenge now is no longer whether non-realism is true in quantum states, but how far we can push its power.

References

1. **A. Aspect**, John Bell and the second quantum revolution, introduction to J. S. Bell, Speakable and Unspeakable in Quantum Mechanics, 2nd ed. (Cambridge University Press, Cambridge, 2004).

2. **A. Einstein, B. Podolsky, and N. Rosen**, Can quantum-mechanical description of physical reality be considered complete? Phys. Rev. **47**, 777 (1935). https://doi.org/10.1103/PhysRev.47.777

3. **D. Bohm**, A suggested interpretation of the quantum theory in terms of "hidden" variables. II, Phys. Rev. **85**, 180 (1952). https://doi.org/10.1103/PhysRev.85.180

4. **J. S. Bell**, On the Einstein Podolsky Rosen paradox, Physics **1**, 195–200 (1964). https://doi.org/10.1103/PhysicsPhysiqueFizika.1.195

5. **A. Becker**, Quantum gambling and the nature of reality, NOVA (PBS). https://www.pbs.org/wgbh/nova/article/quantum-gambling-and-the-nature-of-reality/ (accessed 20 November 2025)

6. **J. F. Clauser, M. A. Horne, A. Shimony**, and R. A. Holt, Proposed experiment to test local hidden-variable theories, Phys. Rev. Lett. **23**, 880–884 (1969). https://doi.org/10.1103/PhysRevLett.23.880

7. **B. Hensen et al.**, Loophole-free Bell inequality violation using electron spins separated by 1.3 kilometres, Nature **526**, 682–686 (2015). https://doi.org/10.1038/nature15759

8. **C. A. Kocher and E. D. Commins**, Polarization correlation of photons emitted in an atomic

cascade, Phys. Rev. Lett. **18**, 575–577 (1967). https://doi.org/10.1103/PhysRevLett.18.575

9. **M. A. Duguay**, Diachronic representation of space–time applied to problems in special relativity and in quantum optics, Physics Essays **18**(2), 239–262 (2005). https://doi.org/10.4006/1.3025741

10. **S. J. Freedman and J. F. Clauser**, Experimental test of local hidden-variable theories, Phys. Rev. Lett. **28**, 938–941 (1972). https://doi.org/10.1103/PhysRevLett.28.938

11. **J.-Å. Larsson**, Loopholes in Bell inequality tests of local realism, J. Phys. A: Math. Theor. **47**, 424003 (2014). https://doi.org/10.1088/1751-8113/47/42/424003

12. **P. M. Pearle**, Hidden-variable example based upon data rejection, Phys. Rev. D **2**, 1418–1425 (1970). https://doi.org/10.1103/PhysRevD.2.1418

13. **J. L. Miller**, Three groups close the loopholes in tests of Bell's theorem, Phys. Today **69**(1), 14–16 (2016). https://doi.org/10.1063/PT.3.3039

14. **A. Aspect, J. Dalibard, and G. Roger**, Experimental test of Bell's inequalities using time-varying analyzers, Phys. Rev. Lett. **49**, 1804–1807 (1982). https://doi.org/10.1103/PhysRevLett.49.1804

15. **W. D. Phillips and J. Dalibard**, Experimental tests of Bell's inequalities: a first-hand account by Alain Aspect, Eur. Phys. J. D **77**, 8 (2023). https://doi.org/10.1140/epjd/s10053-022-00557-6

16. **M. W. Doherty, N. B. Manson, P. Delaney, F. Jelezko, J. Wrachtrup, and L. C. L. Hollenberg**, The nitrogen-vacancy colour centre in diamond, Phys. Rep. **528**(1), 1–45 (2013). https://doi.org/10.1016/j.physrep.2013.02.001

17. **R. Y. Chiao and J. C. Garrison**, Realism or locality: Which should we abandon? Found. Phys. **29**, 553–560 (1999). https://doi.org/10.1023/A:1018860125021

18. **A. Zeilinger**, Quantum entanglement: A fundamental concept finding its applications, Phys. Scr. **T76**, 203–209 (1998). https://doi.org/10.1238/Physica.Topical.076a00203